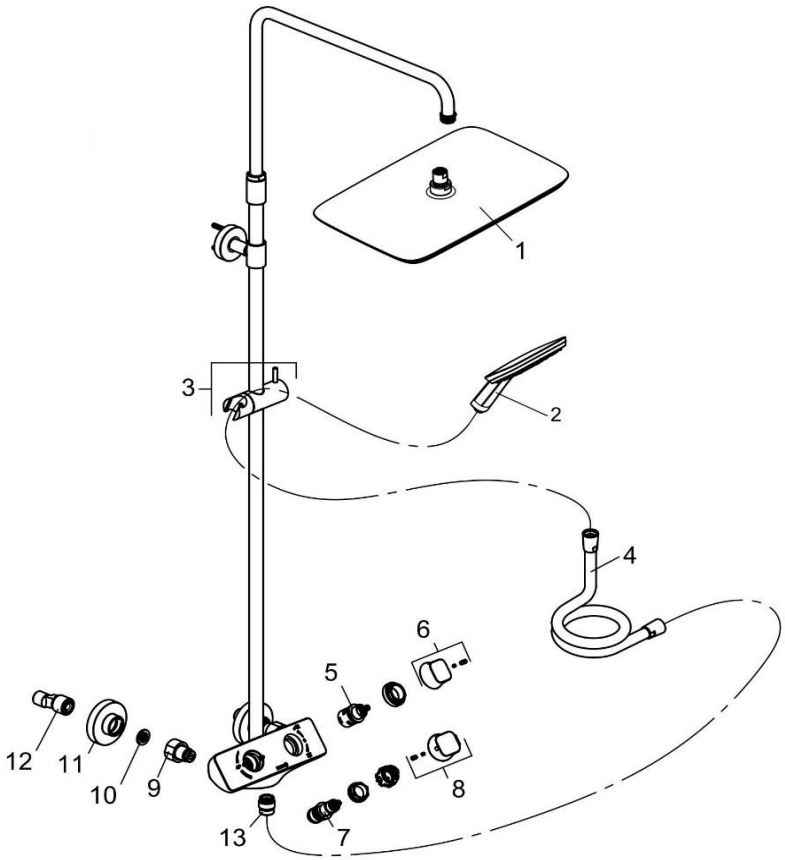

8005005-00		Thermostat Dual Shower System DN 15	Thermostat Dual Shower System DN 15
1	6445005-00	KOPFBRAUSE	HEADSHOWER
2	6450005-00	HANDBRAUSE	HANDSHOWER
3	7383105-00	GLEITSCHIEBER	GILDER
4	6107205-00	BRAUSESCHLAUCH	SHOWER HOSE
5	7490600-00	DIVERTER KARTUSCHE	DIVERTER CARTRIDGE
6	7382905-00	UMSTELLGRIFF	DIVERTER HANDLE
7	7678400-00	THERMOSTAT	TEMPERATURE CONTROL UNIT
8	7382805-00	THERMOSTATGRIFF	HANDLE FOR THERMOSTAT
9	7383005-00	WANDARMATURENANSCHLUSS	WALL CONNECTING NIPPLE
10	95502535-00	SCHMUTZFANGSIEB F. THERMOSTAT	FILTER FOR THERMOSTAT MIXER
11	7380705-00	ROSETTE	ESCUTCHEON
12	7655100-00	S - ANSCHLUSS	S - CONNECTIONS